EU DECLARATION OF CONFORMITY

We,

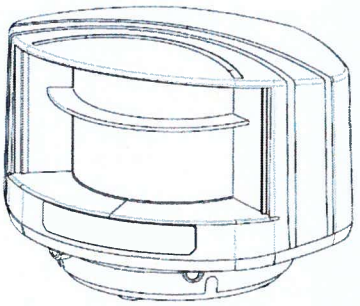

BEA sa
Liège Science Park
Allée des Noisetiers, 5
4031 Angleur
Belgium

declare that this declaration of conformity is issued under our sole responsibility and belongs to the following product(s):

LZR® - I100 / - I110 **laser sensor for automatic industrial doors**

The object of the declaration described above is in conformity with the relevant Union harmonisation legislation:

2014/30/EU	EMC Directive
2006/42/EC	Machinery Directive
2011/65/EU	RoHS 2 Directive

The following standards and technical specifications have been applied:

EN 61000-6-2:2005 +AC:2005	Electromagnetic compatibility (EMC) - Part 6-2: Generic standards - Immunity for industrial environments
EN 61000-6-3:2007 +A1:2011+AC:2012	Electromagnetic compatibility (EMC) - Part 6-3: Generic standards - Emission standard for residential, commercial and light-industrial environments
EN 60825-1:2014	Safety of laser products - Part 1: Equipment classification and requirements
EN ISO 13849-1:2015	Safety of machinery - Safety-related parts of control systems - Part 1: General principles for design (Performance level "d" CAT 2)
EN 62061:2005 +A1:2013+A2:2015+AC:2010	Safety of machinery - Functional safety of safety-related electrical, electronic and programmable electronic control systems (SIL2)
EN 61496-1:2013	Safety of machinery - Electro-sensitive protective equipment - Part 1: General requirements and tests (ESPE Type2)
IEC 61496-3:2008	Safety of machinery - Electro-sensitive protective equipment - Part 3: Particular requirements for Active Opto-electronic Protective Devices responsive to Diffuse Reflection (AOPDDR)
EN 12978:2003 +A1:2009	Industrial, commercial and garage doors and gates - Safety devices for power operated doors and gates - Requirements and test methods
EN 12453:2017	Industrial, commercial and garage doors and gates - Safety in use of power operated doors - Requirements and test methods (Device E)

The notified body TÜV NORD CERT GmbH / number 0044 performed an EC-type examination and issued the EC-type examination certificate No. 44 205 13089629

Signed for and on behalf of: BEA sa

Place and date of issue: ANGLEUR, 18th of March 2019

Name and function: GRAAS E., Product Compliance Manager

Signature: